THIS DRAWING IS UNPUBLISHED. RELEASED FOR PUBLICATION -,- .
© COPYRIGHT - By - ALL RIGHTS RESERVED.

REVISIONS

P	LTR	DESCRIPTION	DATE	DWN	APVD
	N2	REVISED PER ECO-11-004587	11MAR11	RK	HMR
	N3	REVISED PER ECR-17-002552	03MAR2017	RS	MZ

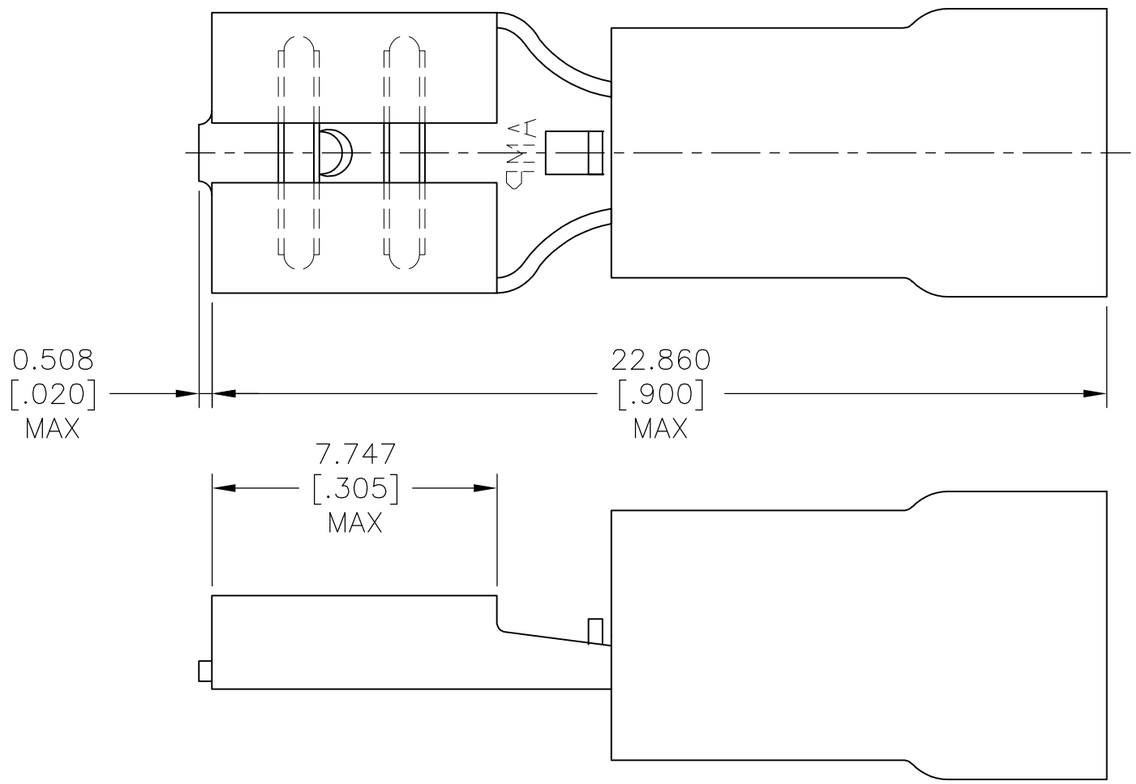

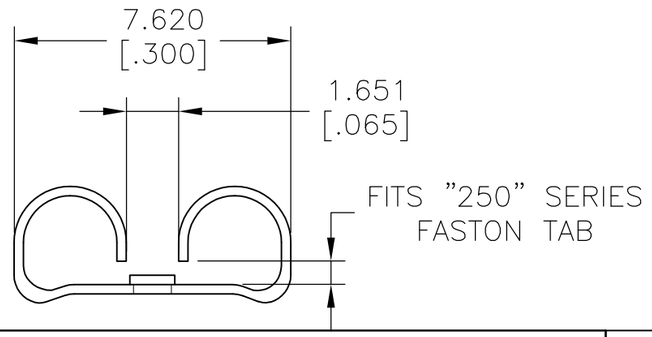

AMP WIRE RANGE	FILE E66717	LR7189 Certified
16-14 AWG STRANDED	16-14 AWG STRANDED	16-14 AWG STRANDED

1 INSULATION DIA ø4.318[ø.170] MAX.

2 FITS TAB 0.812[.032] THK.

3 NOTE DELETED.

4 MATERIAL: BODY, BRASS PER ASTM B36, 0.457±0.050[.018±.002]
SLEEVE: COPPER PER ASTM B152,
INSULATION: NYLON PER ASTM D4066.

5 FINISH: BODY & SLEEVE: TIN PLATE 0.00254[.000100] MIN. EXT. THK. PER ASTM B545.

QTY	PACKAGE TYPE	PART NO
100	LOOSE PC,BOX	8-640905-1
3500	TAPE MOUNTED	640905-2
1000	LOOSE PIECE	640905-1

AMP INCORPORATED
CUSTOMER SERVICE SYSTEMS

FOR ADDITIONAL PRODUCT INFORMATION OR COPIES OF DRAWINGS AND TECHNICAL DOCUMENTS	PRODUCT INFORMATION CENTER 1-800-522-6752
FOR APPLICATION TOOLING INFORMATION	TOOLING ASSISTANCE CENTER 1-800-722-1111
FOR ORDER ENTRY	1-800-526-5142

MAX RECOMMENDED OPERATING TEMPERATURE: 105°C [221°F]
VOLTAGE RATING: 300V MAX
CIRCULAR MIL AREA: 1.04-2.62mm² [2,050-5,180] STRANDED

THIS DRAWING IS A CONTROLLED DOCUMENT.

DIMENSIONS: mm [INCHES]

TOLERANCES UNLESS OTHERWISE SPECIFIED:
0 PLC ± -
1 PLC ± -
2 PLC ± -
3 PLC ± 0.127[.005]
4 PLC ± -
ANGLES ± -

MATERIAL 4
FINISH 5

DWN L OLMEDA 26JUN95
CHK M ELLIS 26JUN95
APVD B BARE 26JUN95
PRODUCT SPEC UL 310
APPLICATION SPEC 114-1002
WEIGHT -

TE Connectivity

NAME RECEPTACLE, 250 SERIES, FASTON , PIDG , 16-14 AWG.

SIZE	CAGE CODE	DRAWING NO	RESTRICTED TO
A3	00779	C-640905	-

CUSTOMER DRAWING | SCALE 6:1 | SHEET 1 OF 1 | REV N3

1470-19 (1/15)